PAPER • **OPEN ACCESS**

Justification of process of loading coal onto face conveyors by auger heads of shearer-loader machines

To cite this article: K L Nguyen *et al* 2018 *IOP Conf. Ser.: Mater. Sci. Eng.* **327** 042132

View the article online for updates and enhancements.

Related content

- Data Processing at the Pierre Auger Observatory
  Jakub Vícha, Jií Chudoba and Pierre Auger Collaboration
- Rules of pulverized coal output under different components of coal petrography and different coal structure in Hancheng Block, China
  S G Liu, K Tu, Z G Peng et al.
- Auger Prime the new stage of the Pierre Auger Observatory, using Universality
  Alejandra Parra, Oscar Martínez and Humberto Salazar

This content was downloaded from IP address 5.18.238.39 on 17/04/2018 at 20:39

IOP Conf. Series: Materials Science and Engineering **327** (2018) 042132 doi:10.1088/1757-899X/327/4/042132

Justification of process of loading coal onto face conveyors by auger heads of shearer-loader machines

K L Nguyen, V V Gabov, D A Zadkov, T B Le

Saint-Petersburg Mining University, 2, 21 Line of Vasilyevsky Island, Saint-Petersburg, 199106, Russian Federation

E-mail: dzadkov@yandex.ru

Abstract. This paper analyzes the processes of removing coal from the area of its dislodging and loading the disintegrated mass onto face conveyors by auger heads of shearer-loader machines. The loading process is assumed to consist of four subprocesses: dislodging coal, removal of the disintegrated mass by auger blades from the crushing area, passive transportation of the disintegrated mass, and forming the load flow on the bearing surface of a face conveyor. Each of the considered subprocesses is different in its physical nature, the number of factors influencing it, and can be complex or multifactor. Possibilities of improving the efficiency of loading coal onto a face conveyor are addressed. The selected criteria of loading efficiency are load rate, specific energy consumption, and coal size reduction. Efficiency is improved by reducing the resistance to movement of the disintegrated mass during loading by increasing the area of the loading window section and the volume of the loading area on the conveyor, as well as by coordination of intensity of flows related to the considered processes in local areas.

1. Introduction.

Presently, the most popular coal mining machines in industrially developed countries are narrow-web shearer-loader machines with auger heads. Auger heads (AH) are characterized by simplicity of design, reliability, and combination of operations of coal body crushing, its removal from crushing area and loading onto a conveyor [1, 2, 3]. However, recent years brought forth substantial contradictions in development of underground coal mining processes in fully-mechanized longwalls: the rapid increase in shearer performance and extraction volume, on the one hand, and the excessive growth of fine-grained coal volume (up to 40% of total volume [4, 5]) in the final yield - on the other.

Such situation is connected with insufficient loading capability of the tools that follow the machine's path caused by the low area of the loading window, which limits the machine's maximum performance and leads to further crushing of coal during its loading onto a conveyor in confined conditions.

An increase in efficiency of loading coal by shearer machine heads onto face conveyors in fully-mechanized longwalls (FML) was previously achieved by different means depending on coal extraction conditions: from thin [6], thick [2], flat or inclined [7] seams, by longwall [8, 9] or shortwall [10] mining. This research addresses the process of loading coal by shearer-loader AH onto a conveyor during longwall face mining of moderately thick flat seams, where the bulk of coal is mined underground.

Content from this work may be used under the terms of the Creative Commons Attribution 3.0 licence. Any further distribution of this work must maintain attribution to the author(s) and the title of the work, journal citation and DOI.
Published under licence by IOP Publishing Ltd

In the practice of mining operations, the increase in efficiency of the considered loading and transportation operations was achieved by three different methods: by advancing the actual auger tools of the extracting machine [1, 2], designing auxiliary sill cleaning equipment in the form of plowshares translationally moved behind AH and plowshares mated to the armored face conveyor.

With the rise in the intensity of FML coal mining, especially in technology-demanding coal seams, drawbacks of AHs that follow the machine's path substantially set back the efficiency [1, 11]. The fact that disintegrated mass is incompletely loaded on the conveyor leads to additional crushing of coal and formation of fine-grained dust, including flying dust that is dangerous both according to sanitary regulations and explosion hazard, as well as to increased specific power consumption in the process of loading. That being the case, unsatisfactory sill cleaning leads to systematic delay in conveyor movement to web width and, consequently, a decrease of the operating load of the mine face. Conveyor delay leads to distortion of its grid structure and face line, which deteriorates the conditions for moving the machine to the next shearing step and decreases the reliability of the whole mining process. This is the reason that makes research aimed at improving the process of loading coal onto a face conveyor by FHs of shearer-loader machines currently important.

The main idea of improving the addressed process can be expressed as follows: "the shorter the path of disintegrated rock to a conveyor, the lower its resistance to transportation, and the lesser the time the rock is within the auger operation area, the less intense the coal crushing, dust formation, and the higher the grade of extracted coal and the more efficient the loading process".

While analyzing the process of loading, it is worth noting its general complexity, dependence on multiple factors, and substantial difference of processes in contiguous spatial areas (Fig. 1): Area I: dislodging coal; Area II: removal of disintegrated rock by auger blades from the crushing area; Area III: passive transportation of the rock mass; Area IV: forming the load flow on the conveyor. This makes it necessary to address the processes in each area, determining input and output parameters, understanding the nature of processes, establishing equations between the input and output parameters and the processes in sequentially contigouous areas.

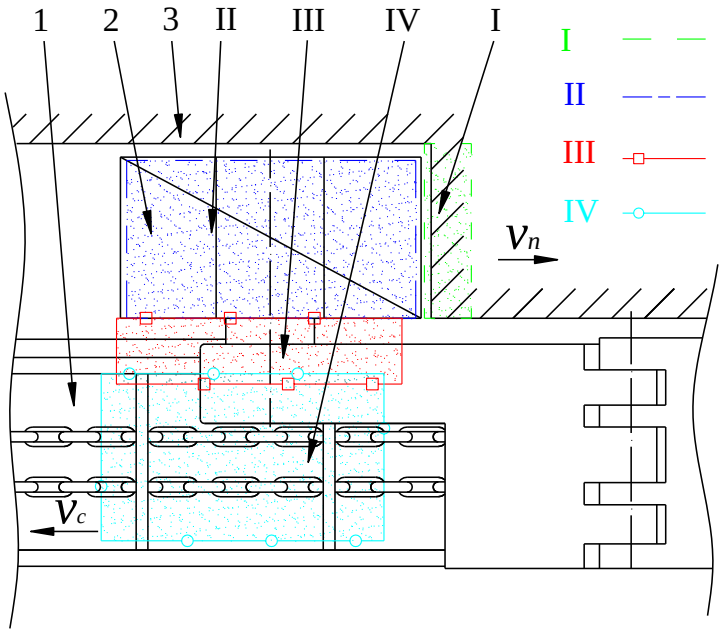

Figure 1. Loading process areas: 1 − conveyor; 2 − auger; 3 − coal seam; I − coal dislodging; II − removal of disintegrated mass by blades; III − passive transportation of disintegrated mass; IV − forming the load flow on the conveyor

2. Area I

Encompasses the process of dislodging coal by a machine tool by means of web-shearing by crescent-shaped shearers. This is the main process in mining mineral products using shearer machines. It is the most researched, formalized, and can be represented by conditions of its intensity, formation of grade composition, and specific power costs [11, 12, 13].

Performance (intensity) of coal dislodging is determined according to formula [11, 13]:

$$Q_1 = v_n \cdot B_з \cdot H_{cs} \cdot \lambda \text{ , m}^3\text{/min}, \quad (1)$$

where v_n is shearing velocity, m/s; B_3 is web width, m; λ is coal fragmentation factor (λ = 1.6); H_{cs} is thickness of the coal seam destructed by the tool, m.

Grade composition of disintegrated mass can be calculated using the expression [11]:

$$W_{-d1} = 100 \cdot \left[1 - \exp\left(-\frac{k_{ca}}{m_i^2} d_c^{m_i} \right) \right], \%, \quad (2)$$

where k_{ca} is the indicator of reduced power of coal aggregation for AH; m_i is coal comminution property; d_c is the defining grade (sieve size).

Specific power costs can be determined according to formula [4, 6]:

$$H_{w1} = \frac{P}{60 \cdot B_з \cdot H_{cs} \cdot v_n}, \text{ kW h/m}^3, \quad (3)$$

where P is the power consumed by the machine's engines from the mains network, kWt.

There also are other equations, power and energy characteristics that affect the processes of kinematic and power parameters.

Input parameters of the process under consideration are the values of parameters that characterize the strength properties of a coal seam ($\overline{A}_{ПЛ}$, E, a, etc. [13]), mine face parameter values ($B_з$, H_{cs}, γ, etc.), the layout of tool bits in the AH and operating mode (v_n, v_p). It is rational to consider the output parameters as the criteria of the process efficiency (Q_1, W_{-d} и H_w).

The analysis performed indicates that this process is sufficiently researched and formalized. The variable values that affect the intensity of the process are the velocity of feed v_n , cutting velocity v_p and web width $Bз$.

3. In Area II

The disintegrated mass is transported by a screw auger from the crushing area to the load section. This process can be represented by equations of intensity (performance) and specific energy consumption [11, 10, 14].

Maximum (theoretical) auger performance can be determined according to expressions [10, 13]:

$$Q_{AP} = [\frac{\pi}{4}(D_{AHD}^2 - d_{AHD}^2) - \Delta S] \cdot S \cdot n_{rot} \cdot K_з \cdot c \text{ , m}^3\text{/min}, \quad (4)$$

where n_{rot} is auger rotation velocity, s^{-1}; D_{AHD} is the equivalent diameter of the tool, m; d_{AHD} is an auger hub diameter, m; $\delta_{Ш}$ is an auger flight gauge, m; N_3 is the number of Archimedean screws; $K_з$ is auger load ratio; S is auger blade twist, m; c is the coefficient that factors in conveyor inclination; α_A is the auger flight elevation angle in degrees, $\alpha_A = arctg \frac{S}{\pi \cdot D_{AHD}}$, degree; ΔS is the section area of auger elements that increase the effective flow area $\Delta S = \frac{(D_{AHD} - d_{AHD}) \cdot \delta_A \cdot N_з}{2 \sin \alpha_A}$, m^2.

Power consumption of transportation via the screw auger can be assessed by the dependency [1]:

$$H_{w2} = 17{,}6.10^{-6} \frac{M}{\left(S_{сл} - S_1\right)\frac{v_n}{n_{об}}}, \text{ kW h/m}^3, \quad (5)$$

where $S_{сл}$ is the cross section area of the coal layer before loading, m^2; S_1 is the same after loading, m^2; M is torque during loading operation modes: $M = A + B\frac{v_n}{n_{rot}}$, N·m. Here A, B are empirical coefficients of the regression equation.

The input parameters of the process are the output parameters in Area I (Q_1, W_{-d1}), AH design parameters $(D_{AHD}, d_A, \delta_A, S, N_3, \alpha_A)$, and operating mode parameters (n_{rot}, v_n).

The output parameters are auger effective output Q2, grade composition W_{-d2} and specific power consumption H_{w2} for transportation**.**

Operation of front-loading AH has a distinctive feature showing that the axial material flow is formed along the entire web width (auger length). The critical moment in this case is the blade winding angle, the value of the coefficient of friction of the disintegrated coal mass during movement along the blades, moisture, auger direction and turning speed, and availability of the retaining pad (casing) that holds the material within the working area of the auger blades. Under all working modes, AH transportation performance Q_{AP} must be more than the AH performance in coal seam destruction Q_1.

The process in the considered area is sufficiently studied and the methods of calculating the removal process parameters and auger parameters are justified. However, the effect of the auger load degree on the nature of coal fragment movement, circulation, and further fragmentation is studied insufficiently.

Area III covers the passive transportation of disintegrated mass from the auger's unloading section to the conveyor's receiving edge under output pressure created by the spinning auger.

Here, the input parameters of the process are the output parameters from Area II: the intensity of movement and flow pressure at auger output, geometric parameters of the auger and the relative position of the machine, the conveyor, and the loading plowshare within the space of the longwall.

The output parameters of this process are the intensity of disintegrated mass movement in Area III $(Q_{3,}$ m^3/min) and the amount of not loaded coal that remains in the sill ($q_{3\cdot,}$ m^3/min).

The main features of the process in Area III are the changeability of loading window dimensions (S_o), the distance between the auger and the conveyor (L), and seam inclination (α_n), which are taken as their mean values or proceeding from the design and performance data of the machines and other equipment (Fig. 2). This process is insufficiently studied and can only be represented by the correlation of values:

− volume of the mass transported in Area III and that of the mass that was not loaded and left in the sill:

$$Q_{3.} = Q_2 - q_3, \text{ m}^3\text{/min.} \quad (6)$$

− specific quantity of the coal not loaded depending on the feed velocity:

$$q_3 = v_n \cdot F_{nl}, \text{ m}^3\text{/min},$$

where v_n is feed velocity, m/min; F_{nl} is the cross section area of the coal not loaded, m^2 (Fig. 2).

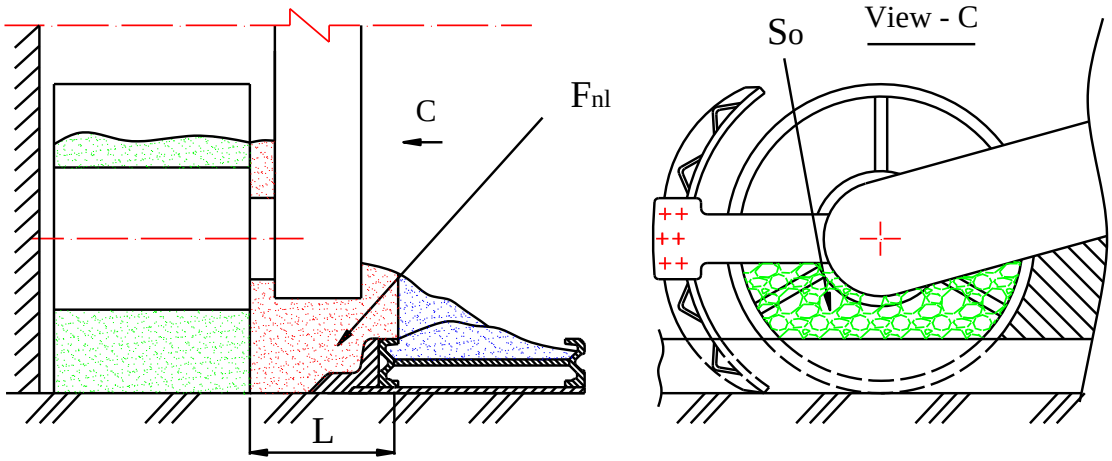

Figure 2. Layout of the AH and the conveyor

It is most difficult to prevent coal spillage in the gap between the auger and the conveyor. Efficiency of the process of transportation in this area depends on the gap between the auger and the conveyor, the loading window area, feed speed of the shearer-loader machine, and seam inclination. The dependencies that represent the loading process are, as a rule, represented to ensure the loading of the entire rock mass that is transported by the auger. It is desirable to have the loading window wider than the actual section area of the coal flow ($S_{f.fact}$) at the auger output $S_o \geq S_{f.fact}$. Thus, according to K. N. Belikova [3], an increase of the gap from 175 to 375 mm decreases the load efficiency factor more than 2 times.

This way, this process is complex, highly unstable, and the least researched one among the processes considered. There are no clear techniques to calculate this process's intensity and power consumption, and to determine the strength characteristics and dimensions of the loading window. The process's complexity and the randomness of forming the values of its parameters necessitate experimental studies and simulation of these processes.

4. Area IV

Shapes the load flow on a conveyor. The input parameters are the output parameters of the process in Area III *(Q_3)*, the shape and dimensions of the face conveyor *(B_c, H_c)*, values of the AH and the conveyor operating mode *(v_{ah}, v_c)*.

The output parameters are the shape and flow section dimensions, and the load flow intensity on the conveyor (in Area IV) Q_4, m^3/min.

The conveyor performance can be represented by the dependence [13]:

$$Q_{K\max} = K \cdot F_{add} \cdot v_c, \text{ m}^3/\text{min}, \quad (7)$$

where v_c is the conveyor belt movement velocity, m/min.; K is the fill factor; F_{add} is the coal flow cross section area on the conveyor, m^2.

This process depends on many parameters: seam inclination, movement velocities and directions of the conveyor belt and the shearer-loader machine, the shape and the section of the belt, etc. That is, this process is insufficiently studied.

5. Conclusion

The degree of influence of this or that particular factor on the process in each particular area can be both substantial and negligible and depends on their combination. This presupposes the necessity of comprehensive study of the loading process in general.

Proceeding from the above-mentioned information, the following conclusions can be made:

− the researched process of loading coal by AH on a conveyor should be considered as consisting of four different processes: coal dislodging, unloading of disintegrated mass by auger blades, passive transportation of the disintegrated mass, and forming the load flow on a conveyor;

− all the processes, according to their physical and mechanical nature, can be considered as complex, and, according to the factors involved, multifactor ones, which is why it is necessary to use the complex research method that includes simulation and experimentation;

− the least studied processes are those of passive transportation of disintegrated mass and forming the load flow on a conveyor;

− it is rational to determine the dependence of the coal transportation process in the passive transportation area on the value of the gap between the auger and the conveyor, and the loading window area.

References

[1] Verner V N 1999 *Study and justification of rational parameters of auger-based loading and transporting tools of extracting machines.. Dissertation of D.Sc. Tech.* (Kemerovo)
[2] Linnik V Yu 2004 *Increasing the efficiency of auger head operation of shearer-loader machines in various operation conditions. Dissertation of Ph. D*. (Moscow)
[3] Belikov K N 1973 Experimental study of loading ability of extracting machine auger head. *PNIUI: collection of scientific papers* **16** 135-146
[4] Gabov V V, Lykov Y V, Bannikov A A 2010 Analyzing coal breakage while mining at the mines of Vorkuta. *International Mining Conference on Advanced mining for sustainable development*. **2010** 283-285
[5] Gabov V V, Zadkov D A 2016 Energy-saving modular units for selective coal cutting. *Eurasian mining* **1** 37-40 DOI: 10.17580/em.2016.01.06
[6] Wang F, Tu S, Bai Q 2012 Practice and prospects of fully mechanized mining technology for thin coal seams in China. *Journal of the South African Institute of Mining and Metallurgy* **112 (2)** 161-170
[7] Afanasev V Ia, Linnik V Iu 2010 Selection of shearer-loader machine tool parameters in particular operation conditions. *Mining Informational and Analytical Bulletin* **12** 348 - 355
[8] Peng S S 2006 *Longwall Mining, 2nd edition*
[9] Zubov V P 2017 Status and directions of improvement of development of coal seams on perspective Kuzbass coal mines. *Zapiski Gornogo instituta* **225** 292-297 DOI: 10.18454/PMI.2017.3.292
[10] Zvonarev I E, Shishlyannikov D I 2017 Efficiency improvement of loading of potassium ore by means of «Ural-20R» heading-and-winning machine. *IOP Conf. Series: Earth and Environmental Science* **87** 022025 DOI :10.1088/1755-1315/87/2/022025
[11] Pozin E Z, Melamed V Z, Ton V V 1984 *Destruction of coal by extraction machines*. (Moscow.: Nedra)
[12] Khair A W 2001 *Research and Innovations for Continuous Miner's Cutting Head for Efficient Cutting Process of Rock* (Coal. 17* International Mining Congress and Exhibition of Turkey - IMCET2001) 45-55
[13] Ministry of Coal Mining of the USSR 1986 OCT 12.44.258-84. *Loading machines. Selection of parameters and calculation of forces of shearing and feeding at tools. Methodology*. (Moscow: Ministry of Coal Mining of the USSR)
[14] Skryabin R M, Timofeev N G 2016 Development of an innovative auger-heat-sink boring shell for drilling prospect pits in the conditions of the cryolitic zone. *Eurasian mining* **1** 33-36 DOI: 10.17580/em.2016.01.05